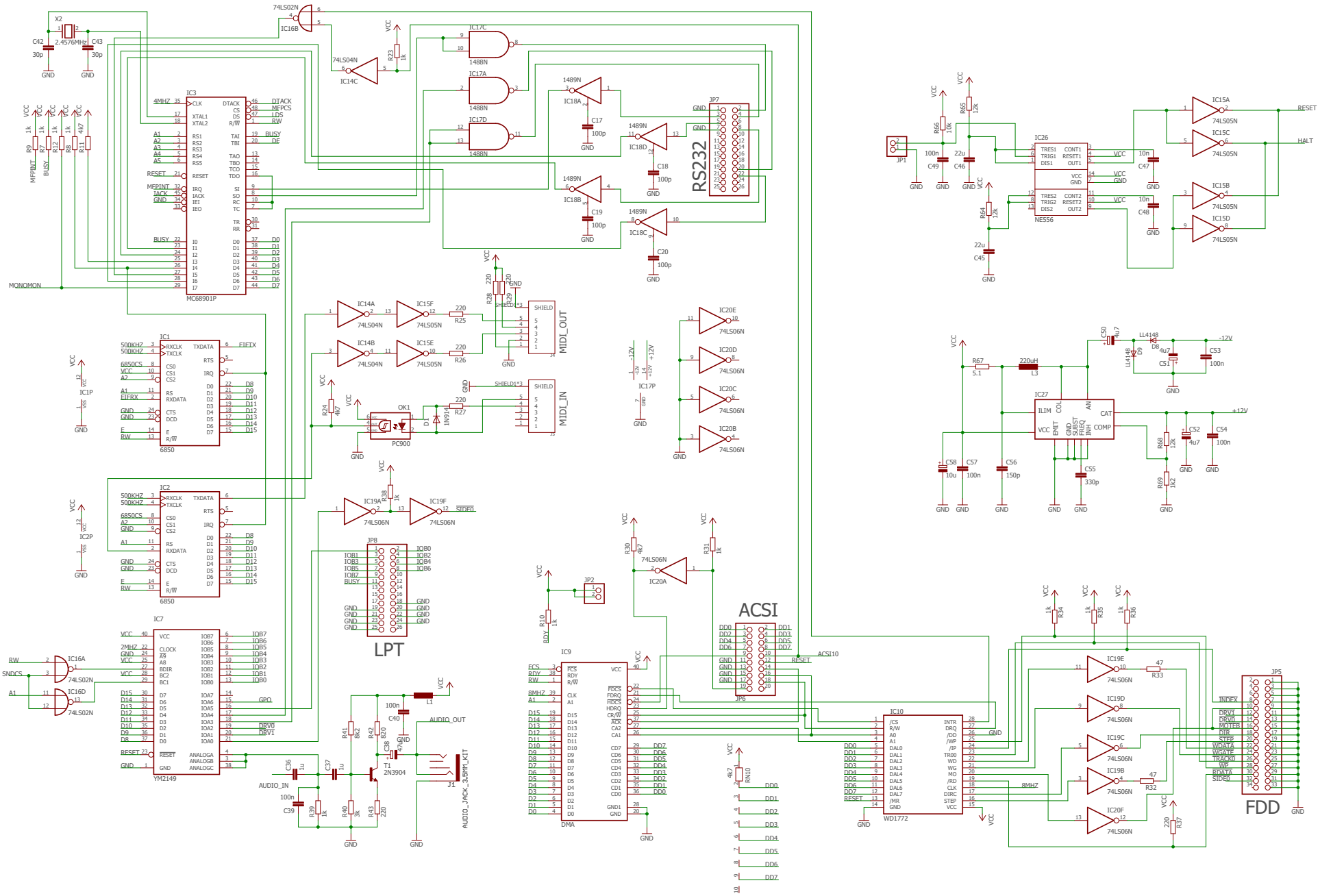
IC3
MC68901P
IC1
6850
IC2
6850
IC7
YM2149
IC9
DMA
IC10
WD1772
IC26
NE556
IC27
RS232
MIDI_OUT
MIDI_IN
LPT
ACSI
FDD
JP5
JP6
JP7
JP8
OK1
PC900
T1
2N3904
J1
AUDIO_JACK_3.5MM_KIT
AUDIO_OUT
AUDIO_IN
MONOMON
MFPINT
BUSY
RESET
HALT
ACSI10
X2
2.4576MHz
C42
30p
C43
30p
GND
VCC